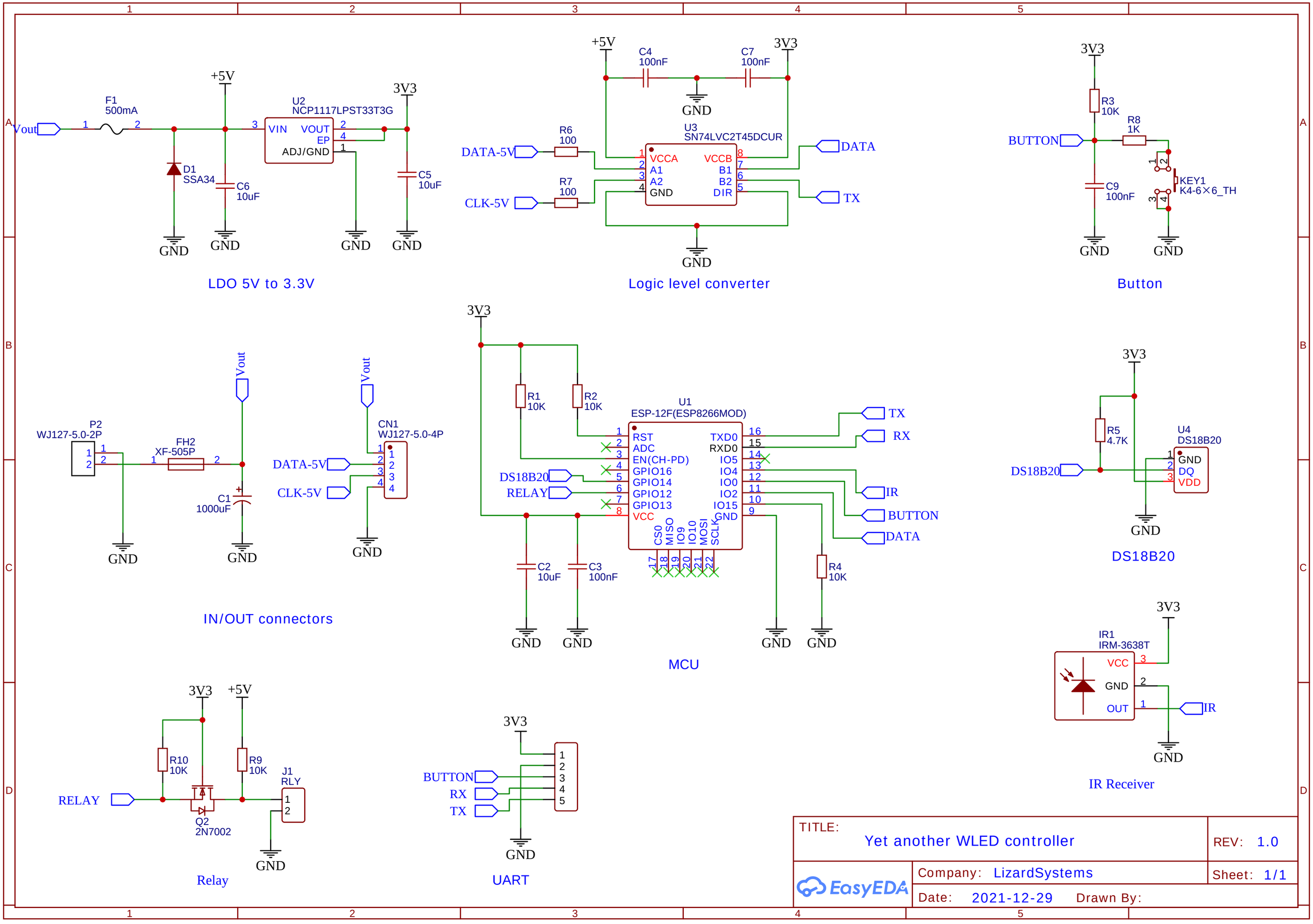
Vout
F1
500mA
D1
SSA34
C6
10uF
+5V
U2
NCP1117LPST33T3G
VIN
VOUT
EP
ADJ/GND
3V3
C5
10uF
GND
LDO 5V to 3.3V
+5V
C4
100nF
C7
100nF
3V3
U3
SN74LVC2T45DCUR
DATA-5V
R6
100
CLK-5V
R7
100
VCCA
A1
A2
GND
VCCB
B1
B2
DIR
DATA
TX
Logic level converter
3V3
R3
10K
R8
1K
BUTTON
C9
100nF
KEY1
K4-6×6_TH
Button
P2
WJ127-5.0-2P
FH2
XF-505P
C1
1000uF
CN1
WJ127-5.0-4P
DATA-5V
CLK-5V
IN/OUT connectors
3V3
R1
10K
R2
10K
U1
ESP-12F(ESP8266MOD)
RST
ADC
EN(CH-PD)
GPIO16
GPIO14
GPIO12
GPIO13
VCC
TXD0
RXD0
IO5
IO4
IO0
IO2
IO15
GND
CS0
MISO
IO9
IO10
MOSI
SCLK
DS18B20
RELAY
TX
RX
IR
BUTTON
DATA
C2
10uF
C3
100nF
R4
10K
MCU
3V3
R5
4.7K
U4
DS18B20
GND
DQ
VDD
DS18B20
IR1
IRM-3638T
VCC
GND
OUT
IR
IR Receiver
3V3
+5V
R10
10K
R9
10K
J1
RLY
RELAY
Q2
2N7002
Relay
3V3
BUTTON
RX
TX
UART
TITLE:
Yet another WLED controller
REV: 1.0
Company: LizardSystems
Sheet: 1/1
Date: 2021-12-29
Drawn By:
EasyEDA