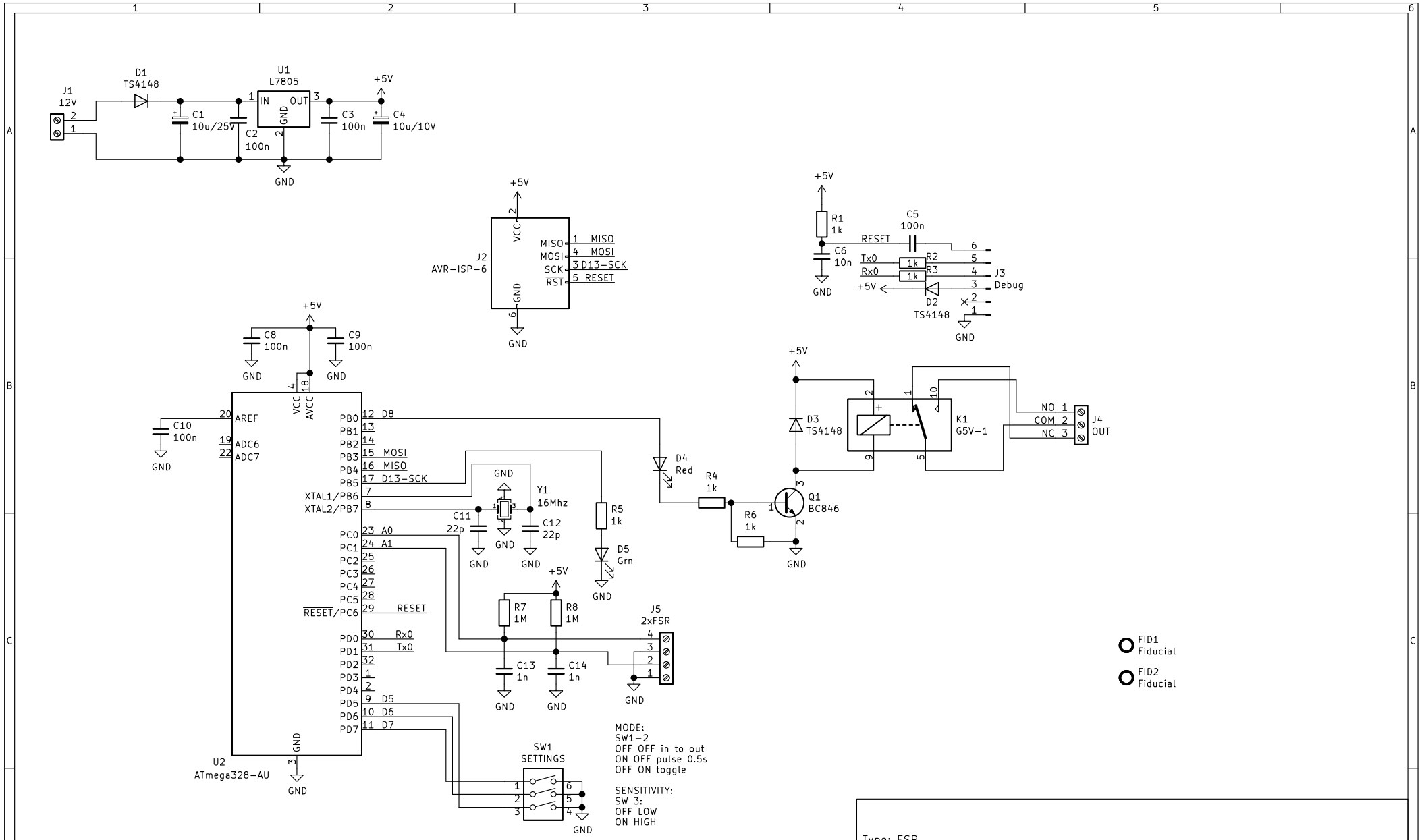

Type: FSR
Conrad Pressure sensor
jatel

Sheet: /
File: presen-fsr.sch

Title: PRESEN-FSR

Size: A4	Date: 2020-01-02	**Rev: 0**
KiCad E.D.A. kicad 5.1.5-52549c584ubuntu18.04.1		Id: 1/1