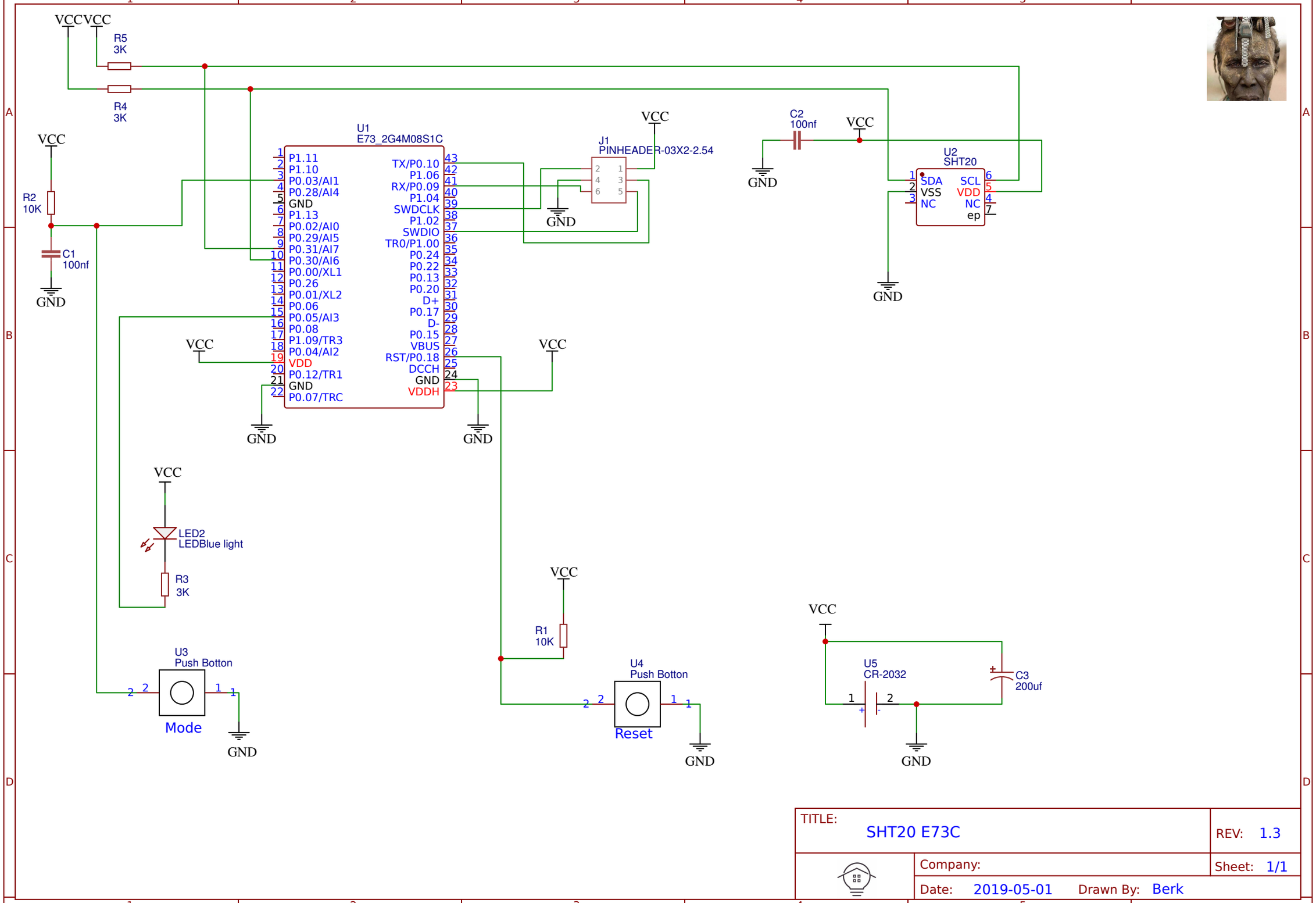

TITLE: SHT20 E73C	REV: 1.3
Company:	Sheet: 1/1
Date: 2019-05-01 Drawn By: Berk	