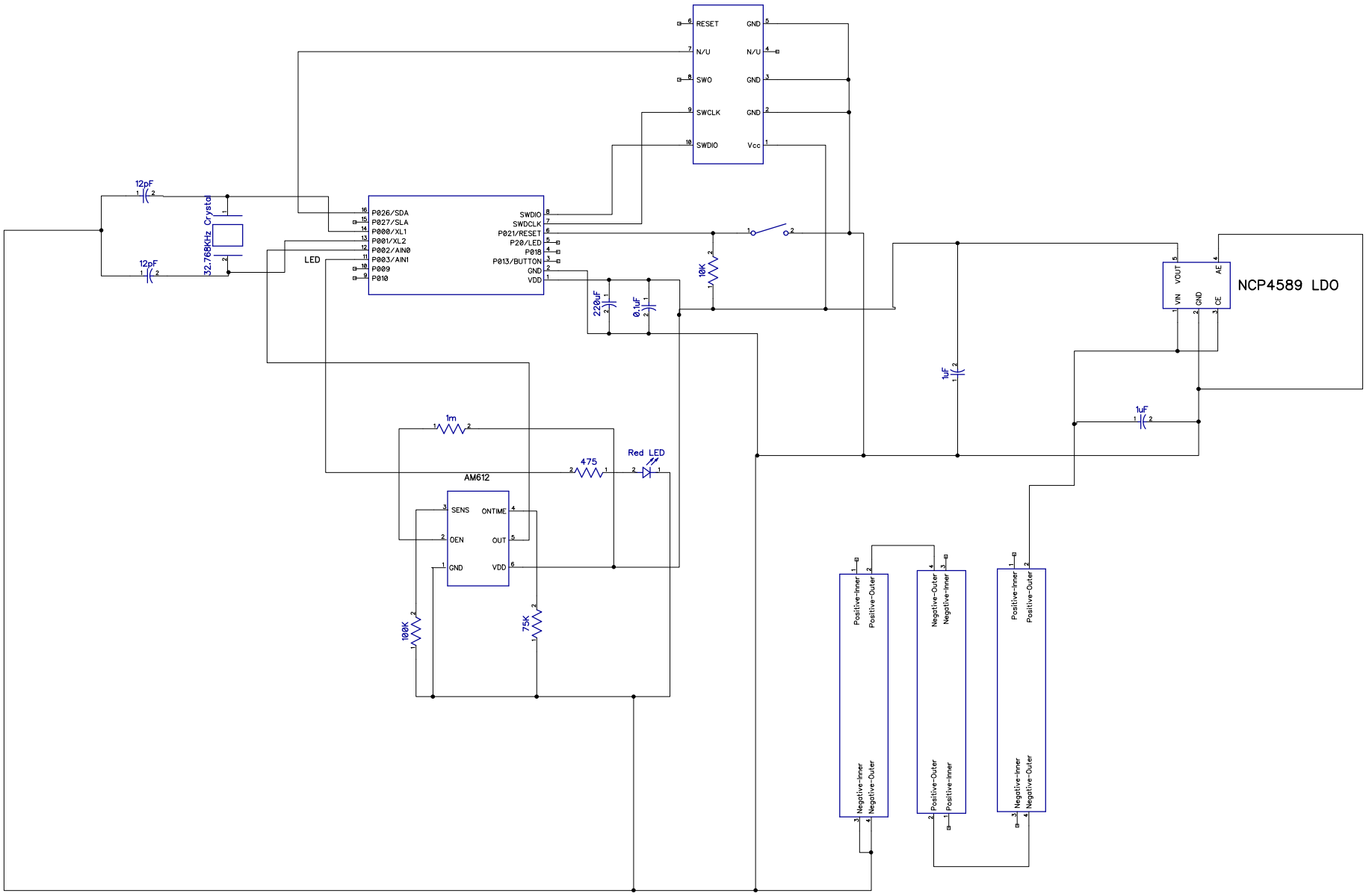
RESET
N/U
SWO
SWCLK
SWDIO
GND
N/U
GND
GND
Vcc
12pF
12pF
32.768KHz Crystal
P026/SDA
P027/SLA
P000/XL1
P001/XL2
P002/AIN0
P003/AIN1
P009
P010
LED
SWDIO
SWDCLK
P021/RESET
P20/LED
P018
P013/BUTTON
GND
VDD
220uF
0.1uF
10K
1uF
1uF
VIN
VOUT
GND
AE
CE
NCP4589 LDO
1m
475
Red LED
AM612
SENS
OEN
GND
ONTIME
OUT
VDD
100K
75K
Positive-Inner
Positive-Outer
Negative-Inner
Negative-Outer
Negative-Outer
Negative-Inner
Positive-Outer
Positive-Inner
Positive-Inner
Positive-Outer
Negative-Inner
Negative-Outer