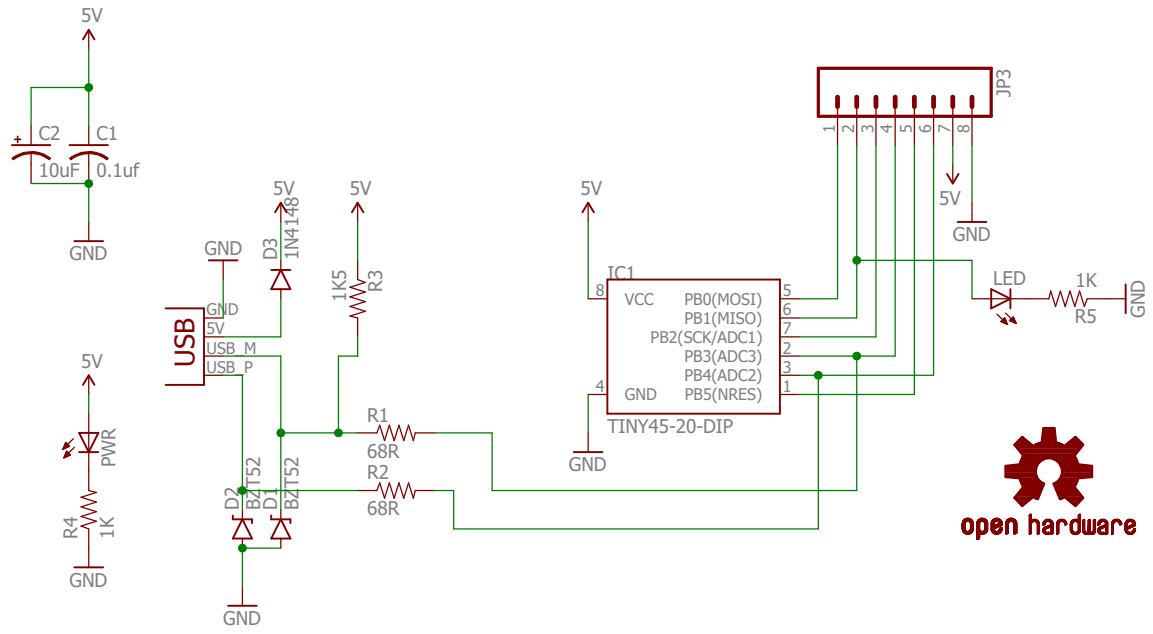

FranzininhoV0RV0

16/03/2017 23:00

Sheet: 1/1