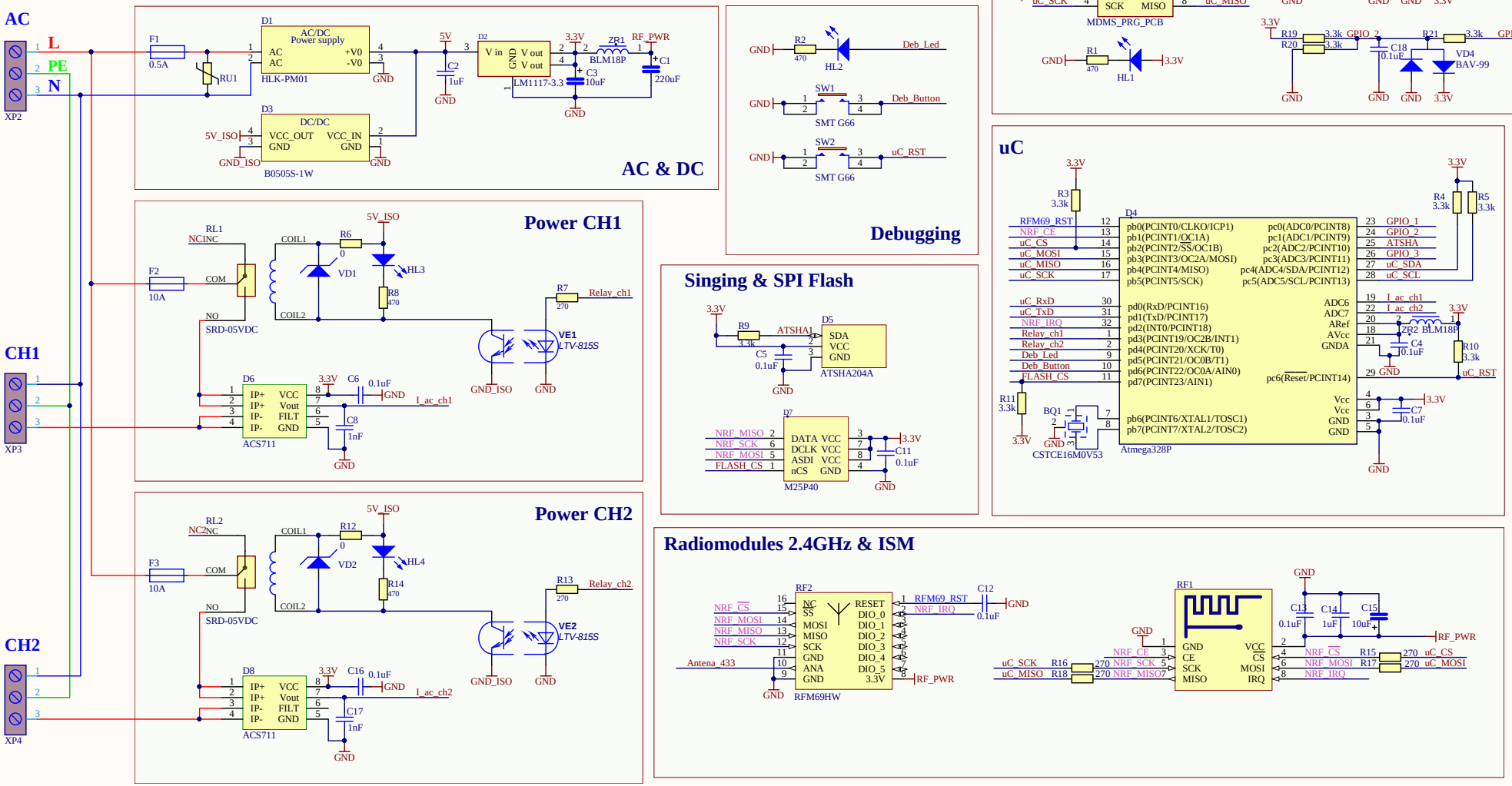

Title *			
Size: A3	Number:*	Revision:*	
Date: 20.05.2017	Time: 16:04:00	Sheet * of *	
File: C:\Users\kalina\Desktop\MDMSNode Power-20170520T125532Z-001\MDMSNode Power\MDMSNode_Power.SchDoc			