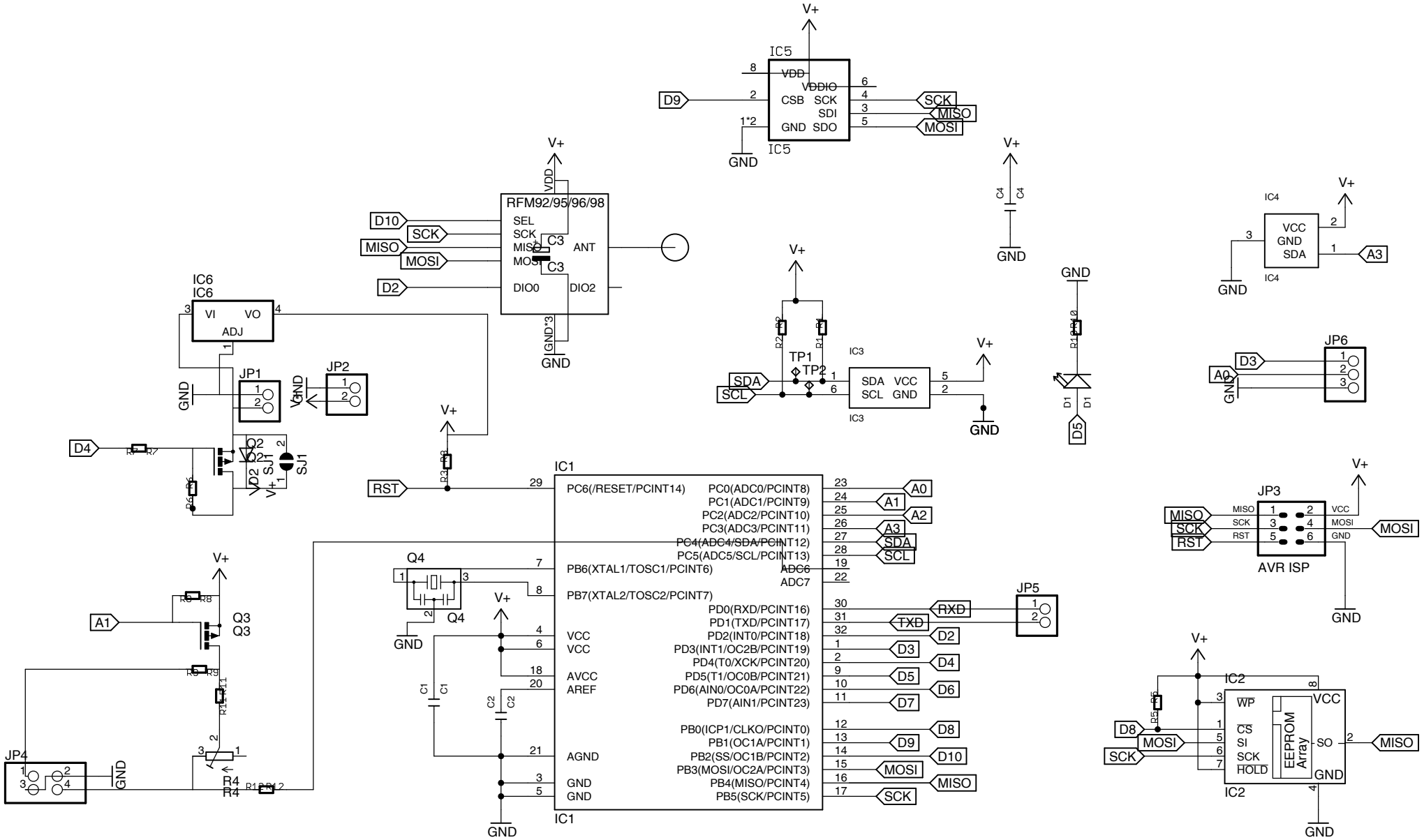
IC5
VDD
VDDIO
CSB SCK
SDI
GND SDO
D9
SCK
MISO
MOSI
GND
V+
RFM92/95/96/98
SEL
SCK
MISO
MOSI
DIO0
DIO2
ANT
D10
D2
C3
IC6
VI VO
ADJ
JP1
JP2
D4
Q2
SJ1
RST
IC1
PC6(/RESET/PCINT14)
PC0(ADC0/PCINT8)
PC1(ADC1/PCINT9)
PC2(ADC2/PCINT10)
PC3(ADC3/PCINT11)
PC4(ADC4/SDA/PCINT12)
PC5(ADC5/SCL/PCINT13)
PB6(XTAL1/TOSC1/PCINT6)
ADC6
ADC7
PB7(XTAL2/TOSC2/PCINT7)
PD0(RXD/PCINT16)
PD1(TXD/PCINT17)
PD2(INT0/PCINT18)
PD3(INT1/OC2B/PCINT19)
PD4(T0/XCK/PCINT20)
PD5(T1/OC0B/PCINT21)
PD6(AIN0/OC0A/PCINT22)
PD7(AIN1/PCINT23)
PB0(ICP1/CLKO/PCINT0)
PB1(OC1A/PCINT1)
PB2(SS/OC1B/PCINT2)
PB3(MOSI/OC2A/PCINT3)
PB4(MISO/PCINT4)
PB5(SCK/PCINT5)
VCC
AVCC
AREF
AGND
GND
A0
A1
A2
A3
SDA
SCL
RXD
TXD
D2
D3
D4
D5
D6
D7
D8
D9
D10
MOSI
MISO
SCK
Q4
C1
C2
JP5
JP4
Q3
R4
IC3
SDA VCC
SCL GND
TP1
TP2
R1
R2
D1
D5
IC4
VCC
GND
SDA
JP6
JP3
MISO
SCK
RST
VCC
MOSI
GND
AVR ISP
IC2
WP
CS
SI
SCK
HOLD
VCC
SO
GND
EEPROM Array
R5