Note: Entering the Ultra-Deep Power-Down mode is accomplished by simply asserting the CS pin, clocking in the opcode 79h, and then deasserting the CS pin.

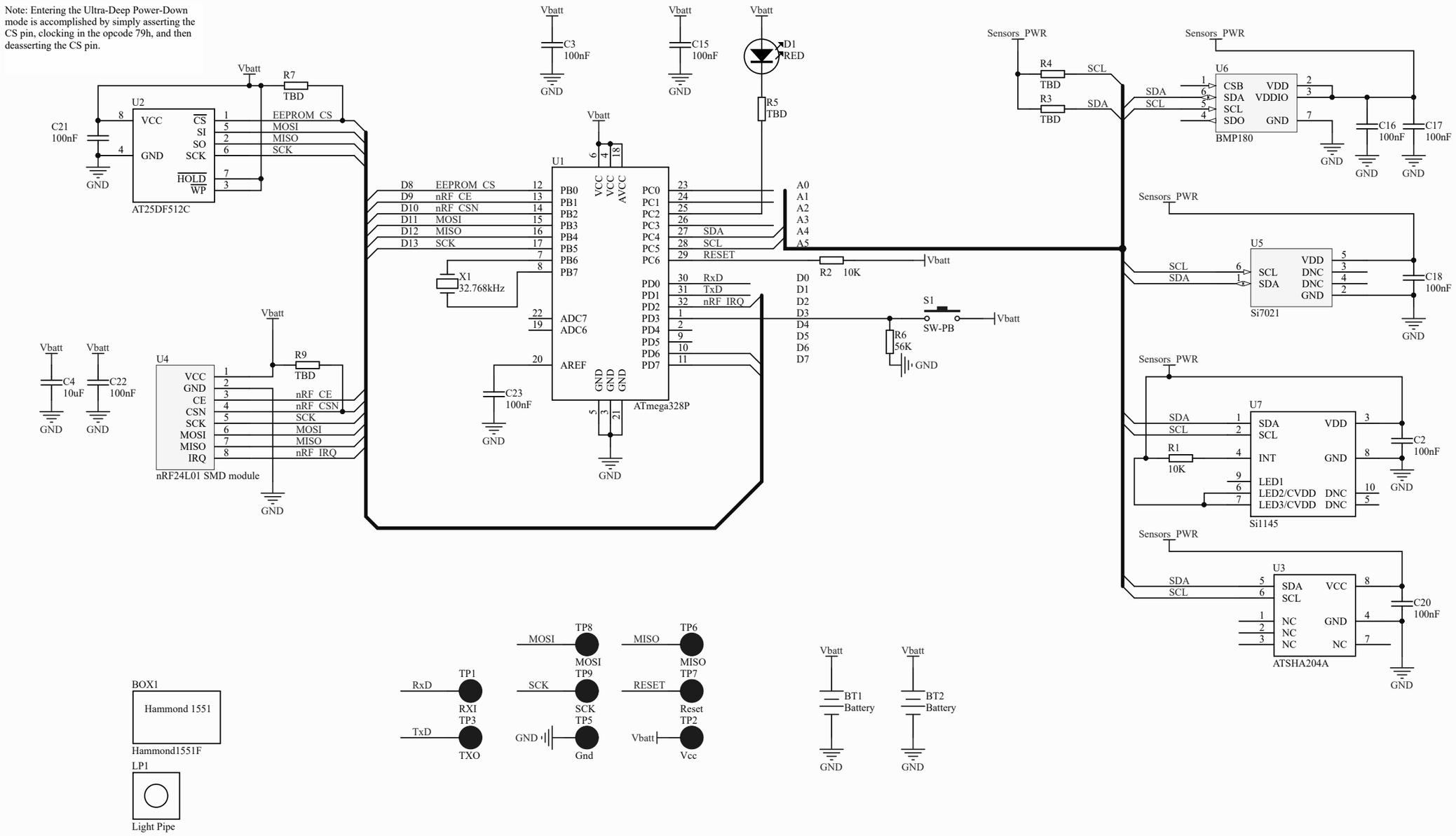

Title		
RFSensor		
Size: A3	Number	Revision: Rev. 1.1
Date: 01-06-2016		Sheet 1 of 1
File: E:\newCloud\..\RFSensor.SchDoc		Drawn By: Jonas Bo Jalling